WARO - Einbau

The electrical connection of elements of line is done by quick-switches. The max. current of line is 14A.

230V/50Hz
cosφ>0.95

IP 20/44

Indoor

LED

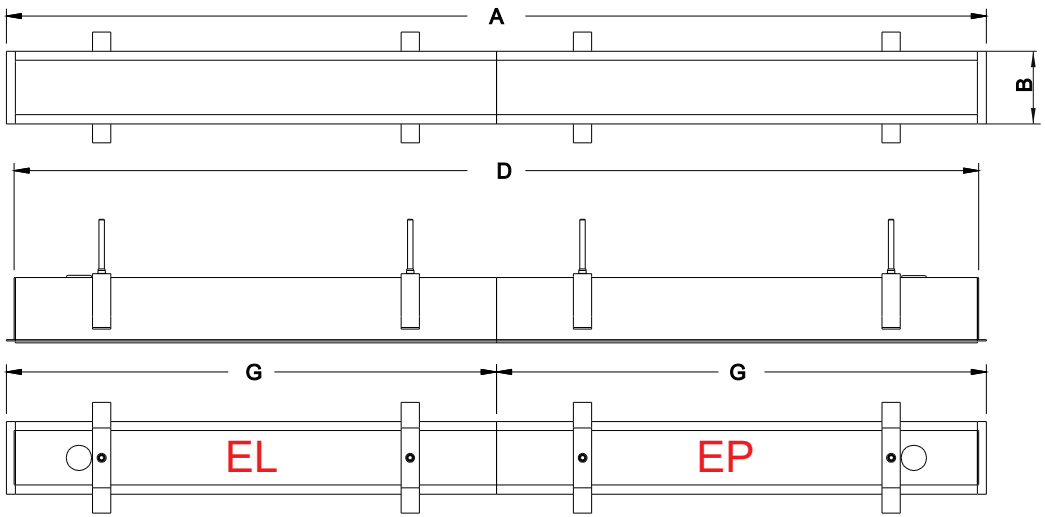

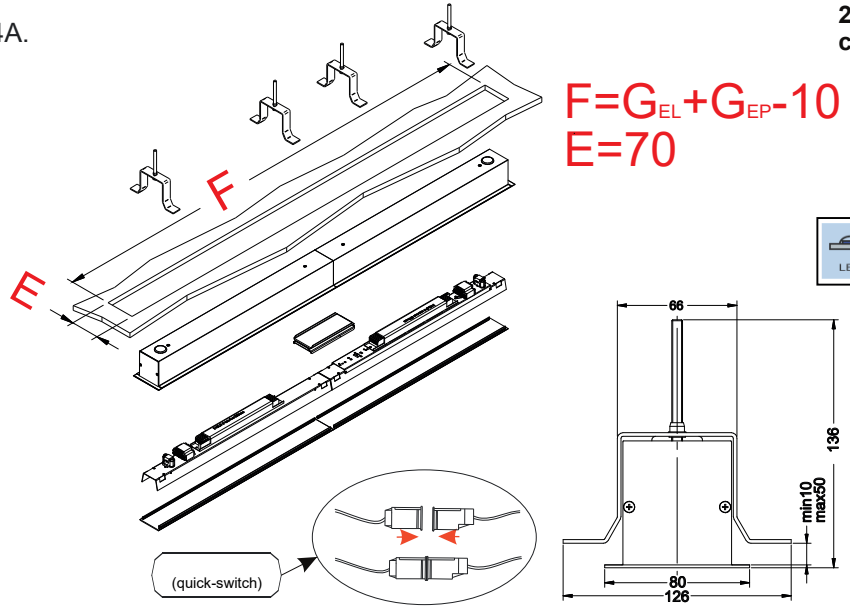

$F=G_{EL}+G_{EP}-10$
$E=70$

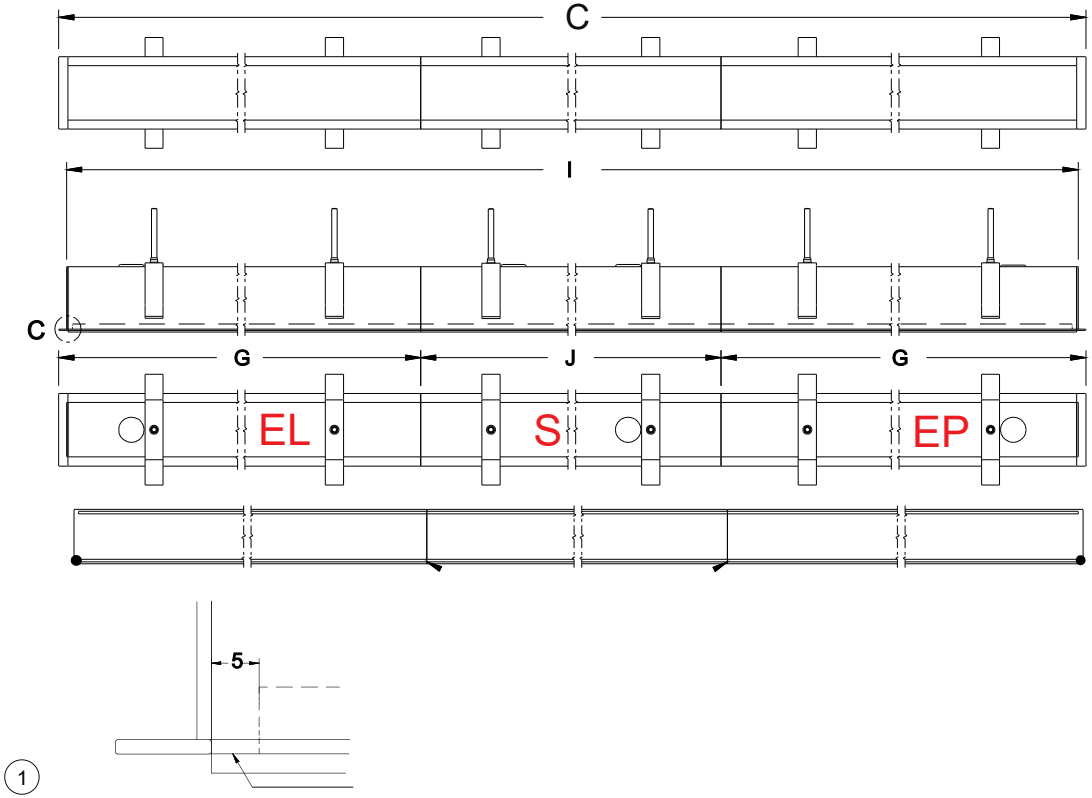

$F=G_{EL}+G_{EP}+J_{S\,1}+J_{S\,2}+\ldots+J_{S\,n}-10$
$E=70$

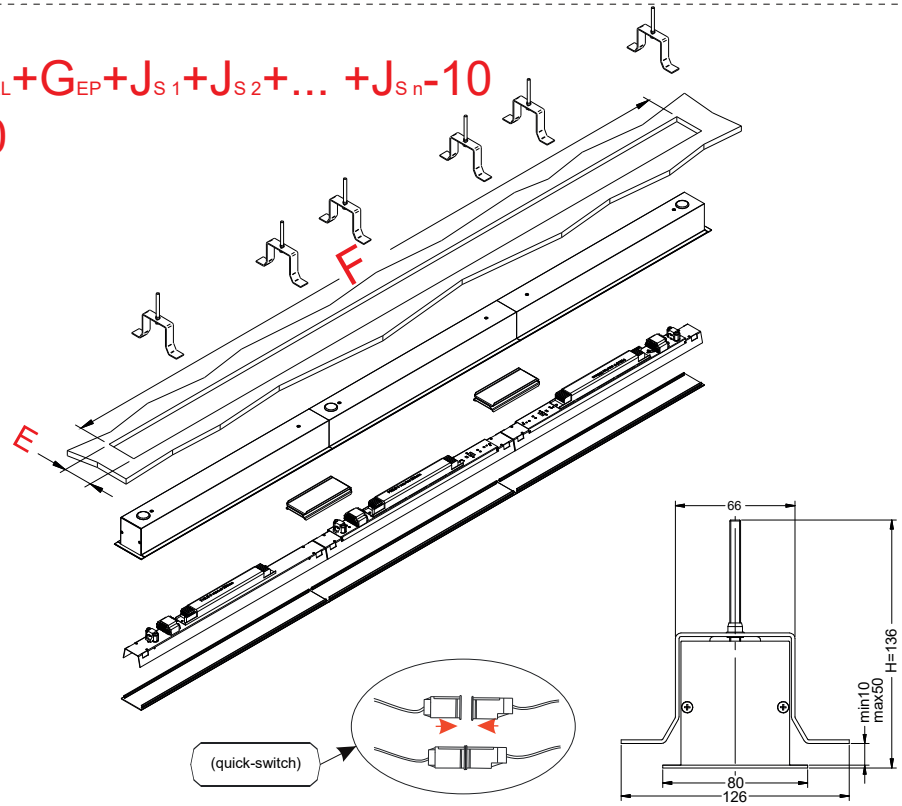

UEBEX LED LIGHTING

I

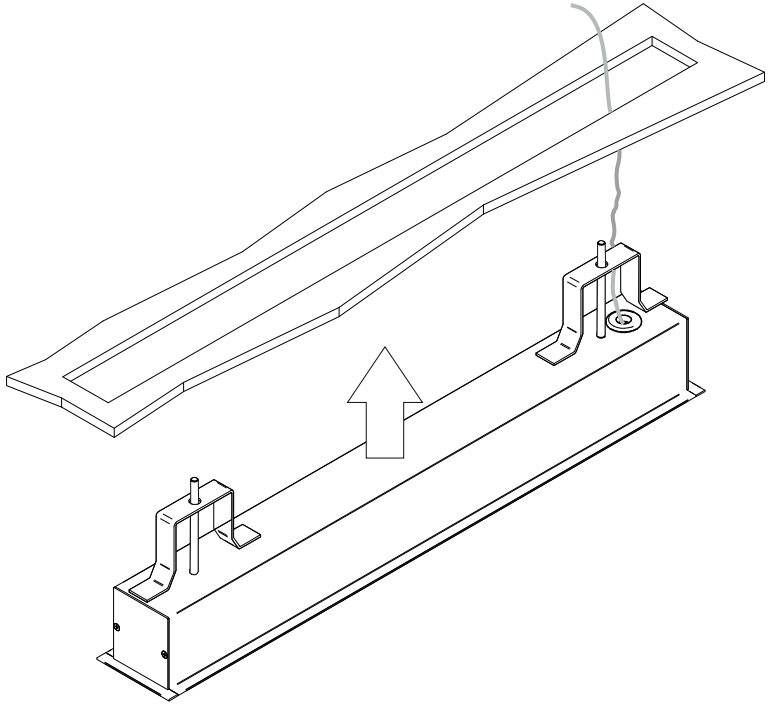

III

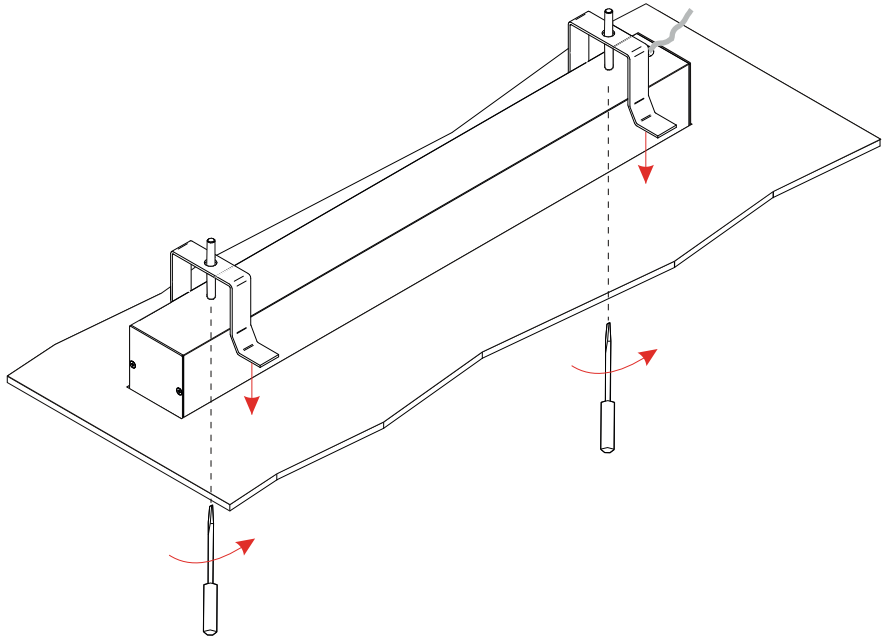

II

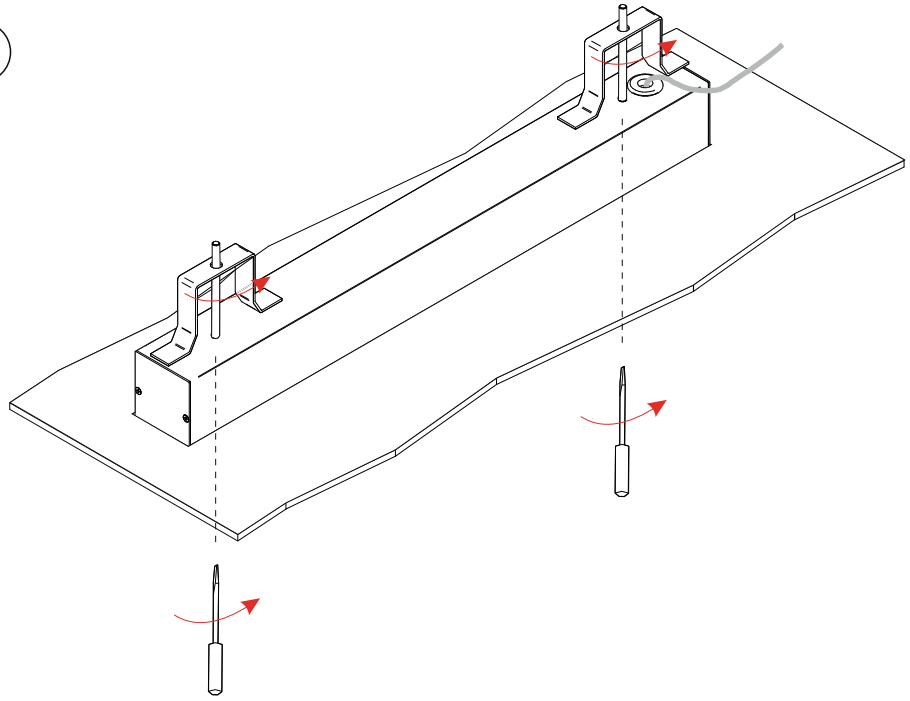

IV

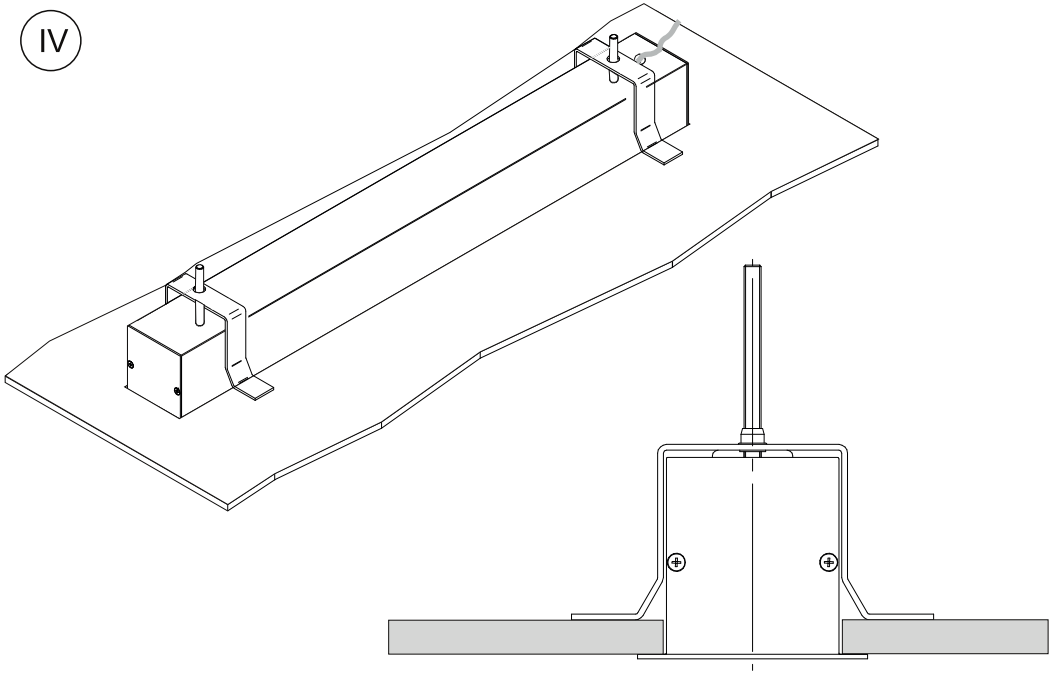

linear connector

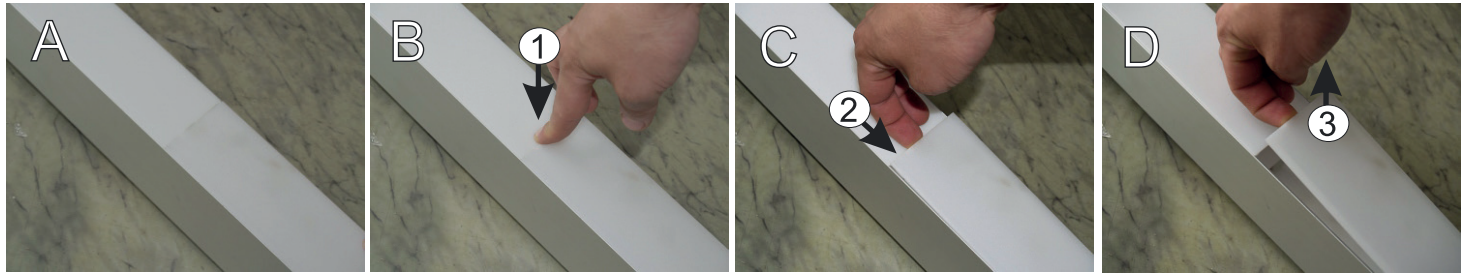

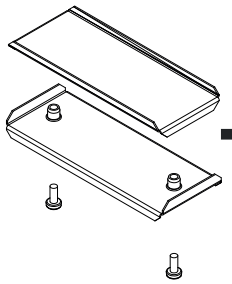

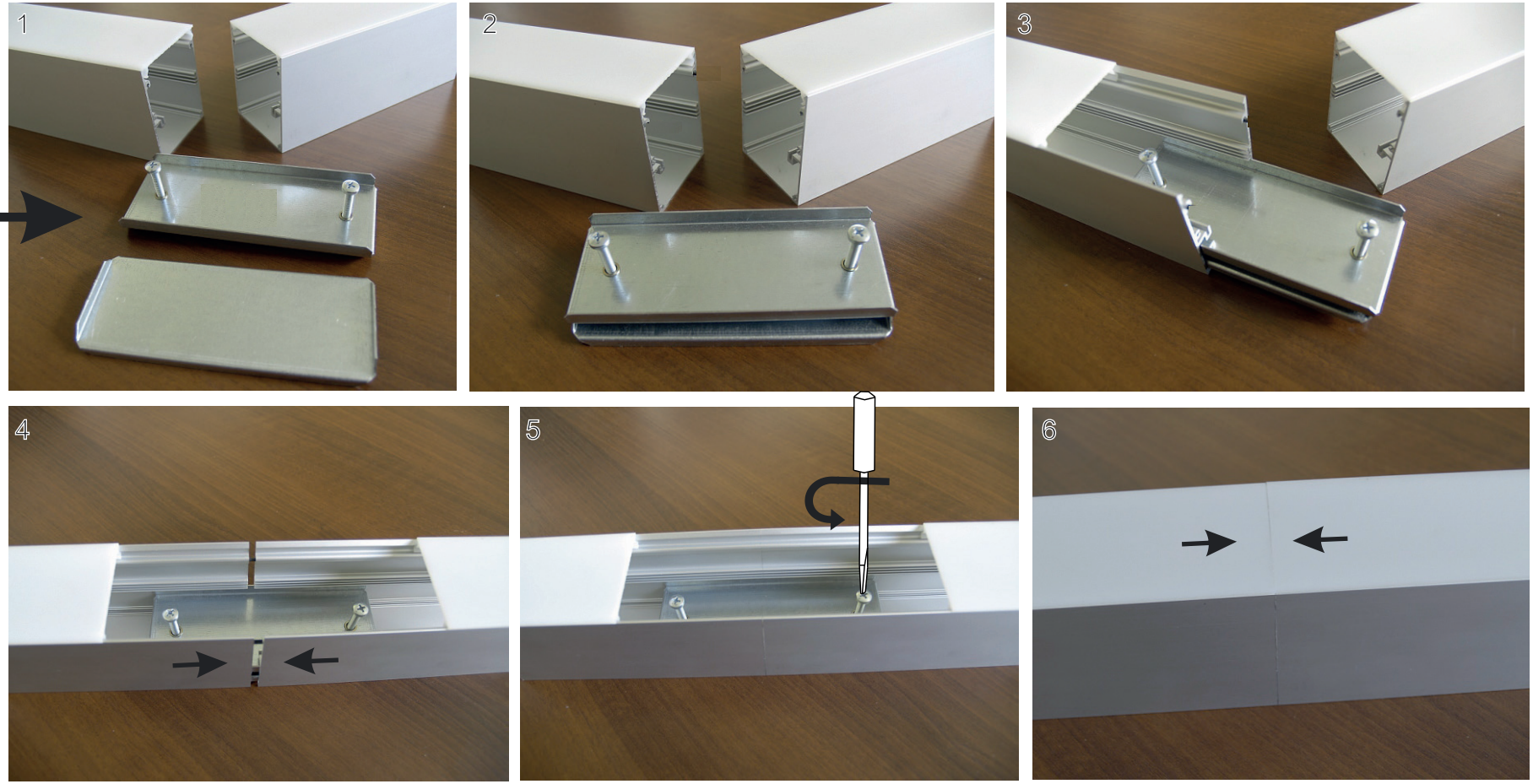

WARNING!
Due to the mechanical properties of WARO PLX and MPRM diffusers approx 2mm gap in between the diffusers may appear.
This gap disappears while luminary warms up. It is a natural phenomenon arising from the laws of physics. While creating a line (row of luminaries) this should be taken on consideration. We do not recommend to make rows longer than 6m. Creating long lines can lead to the formation of cracks or loss of housing diffuser.

CONNECTORS

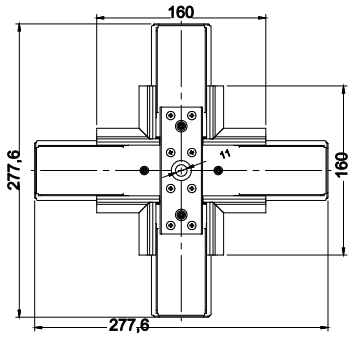
160
277,6
160
277,6
11

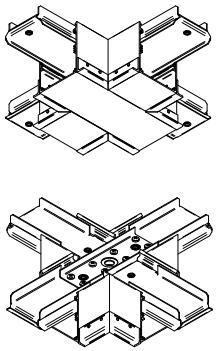

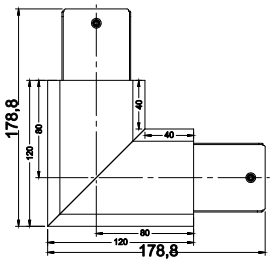
178,8
80
120
40
40
80
120
178,8

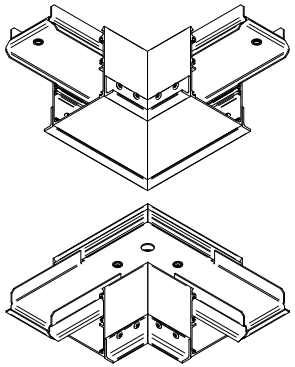

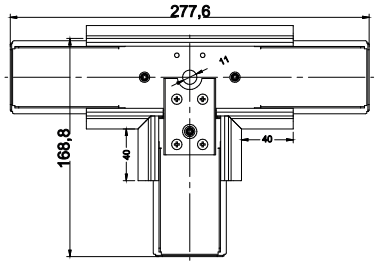
277,6
11
168,8
40
40

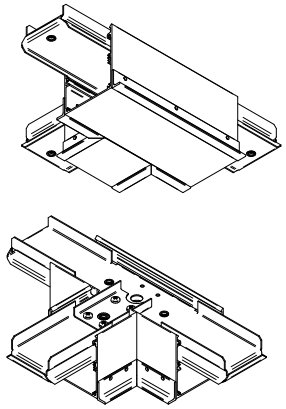

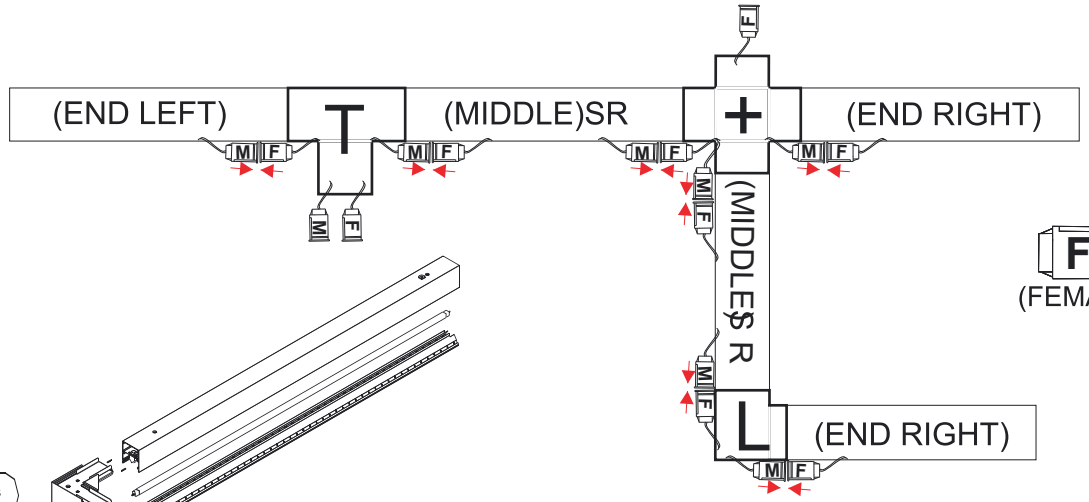
(END LEFT)
T
(MIDDLE)SR
+
(END RIGHT)
M
F
(MIDDLE)SR
L
(END RIGHT)

(END LEFT)
(MIDDLE)SR
(END RIGHT)
M
F

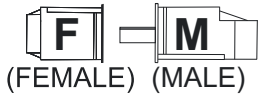
F
M
(FEMALE)
(MALE)

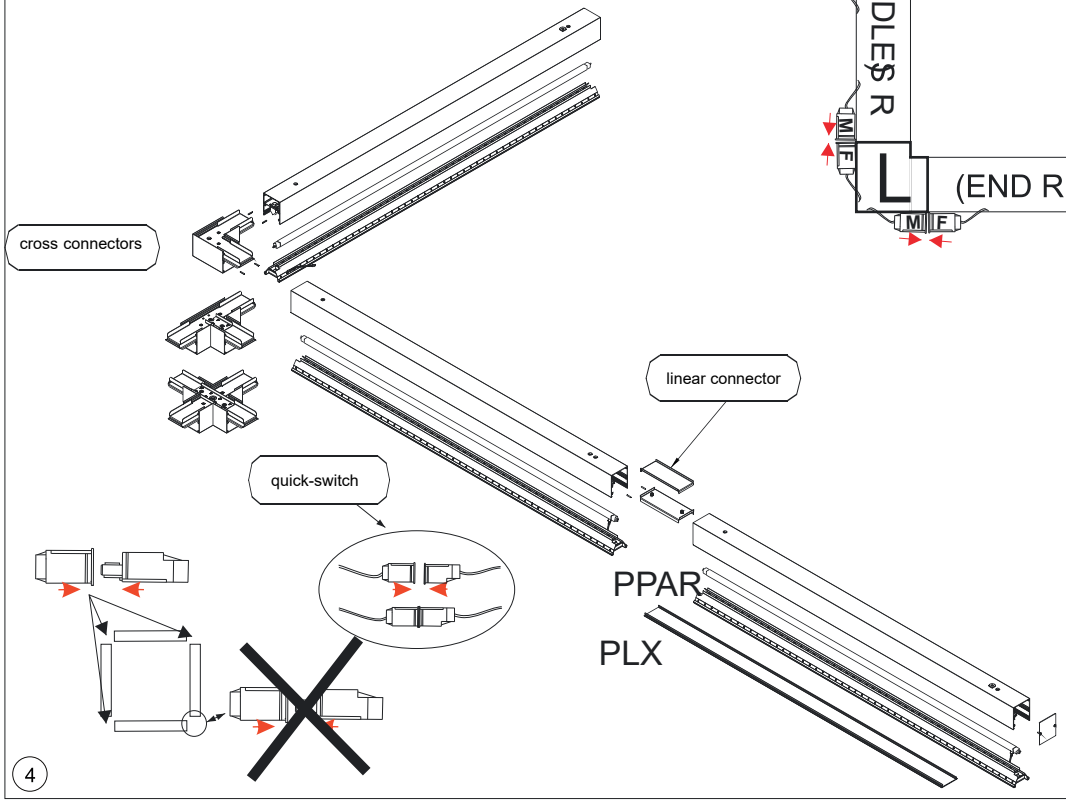
cross connectors
linear connector
quick-switch
PPAR
PLX

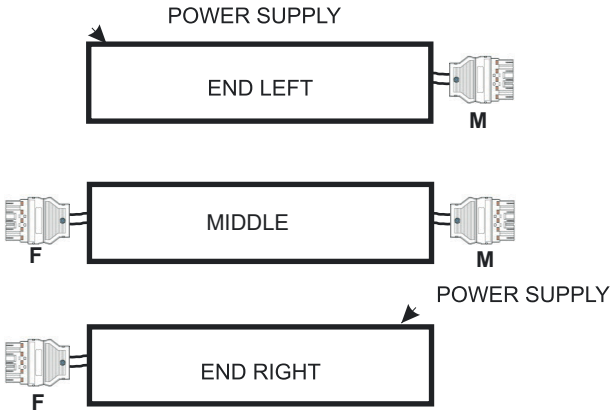
POWER SUPPLY
END LEFT
M
F
MIDDLE
M
POWER SUPPLY
F
END RIGHT

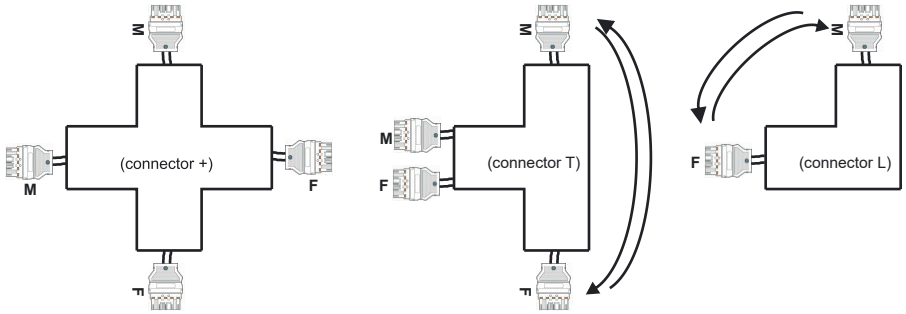
M
M
F
F
(connector +)
M
M
F
F
(connector T)
M
F
(connector L)

For lines L1,L2,L3:

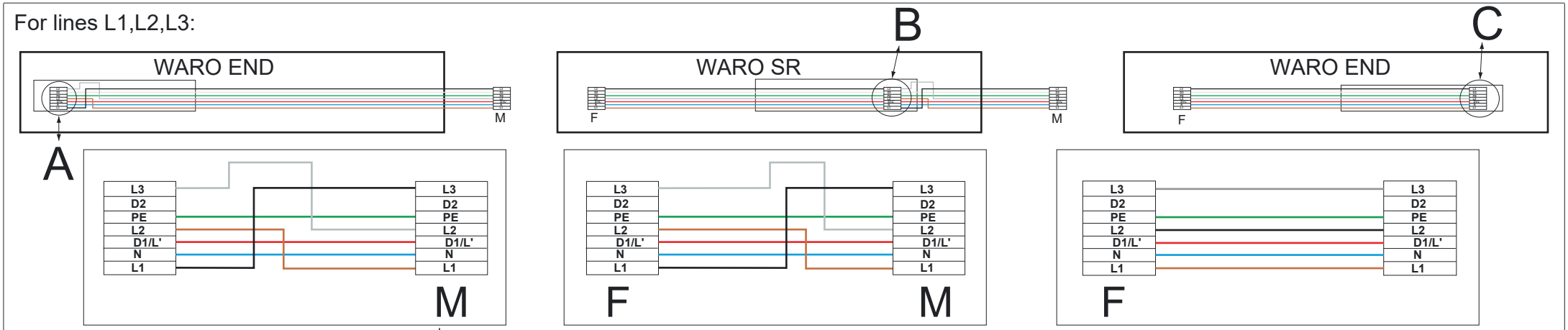

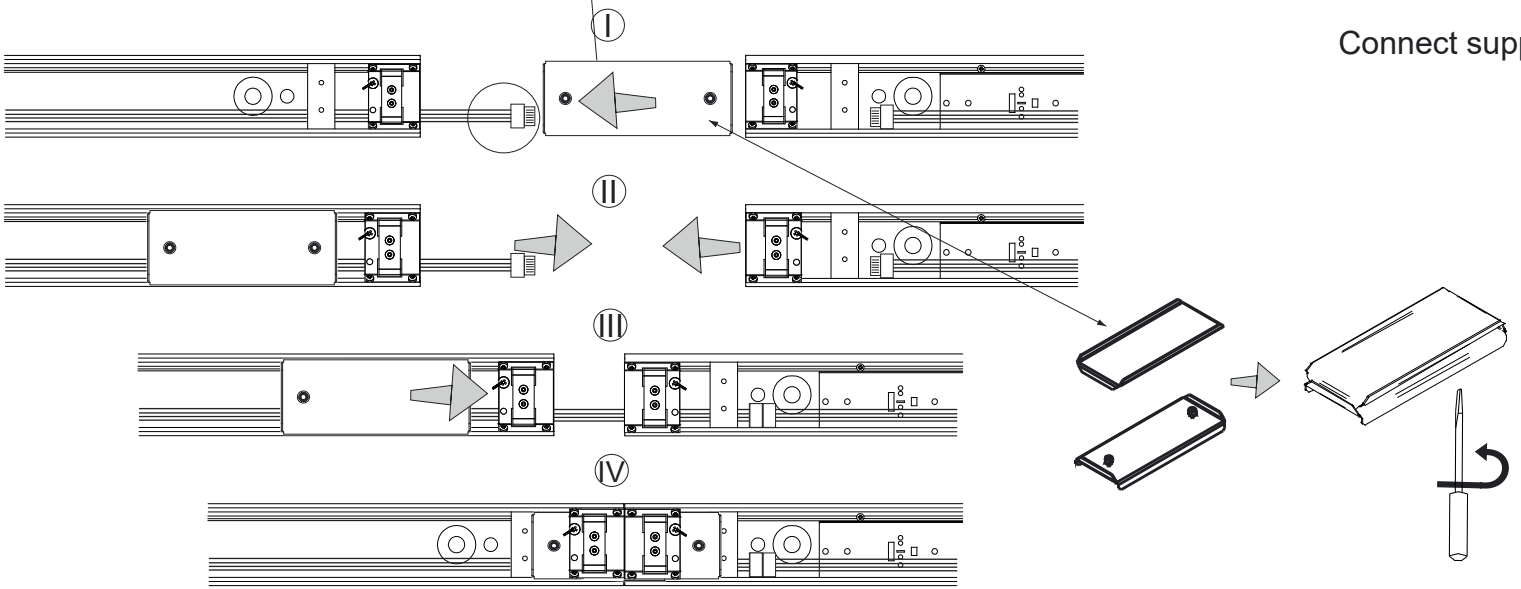

Connect supplying in A or B or C.

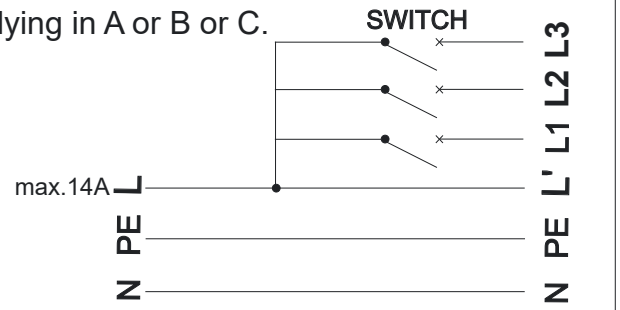

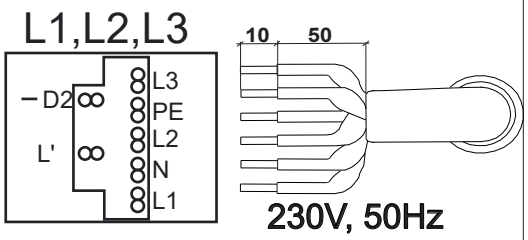

LED	A	B	C	D	E	G	I	J
1300lm / 2200lm	1144	80	1706	1127	70	572	1689	562
1950lm / 3300lm	1704	80	2546	1687	70	852	2529	842
2600lm / 4400lm	2264	80	3386	2247	70	1132	3369	1122
3900lm / 6600lm	3384	80	5066	3367	70	1692	5049	1682
5200lm / 8800lm	4504	80	6746	4487	70	2252	6729	2242
3250lm / 5500lm	2824	80	4226	2807	70	1412	4209	1402
6500lm / 11000lm	5628	80	8432	5611	70	2814	8415	2804
7800lm	6744	80	10106	6727	70	3372	10089	3362
10400lm	8988	80	13472	8971	70	4494	13455	4484
5850lm / 9900lm	5068	80	7592	5051	70	2534	7575	2524
4550lm / 7700lm	3944	80	5906	3927	70	1972	5889	1962

$$F = G_{EL} + G_{EP} + J_{S1} + J_{S2} + \ldots + J_{Sn} - 10 \quad [mm]$$

$$E = 70 \ [mm]$$

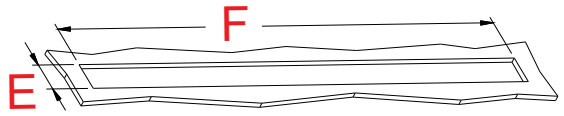

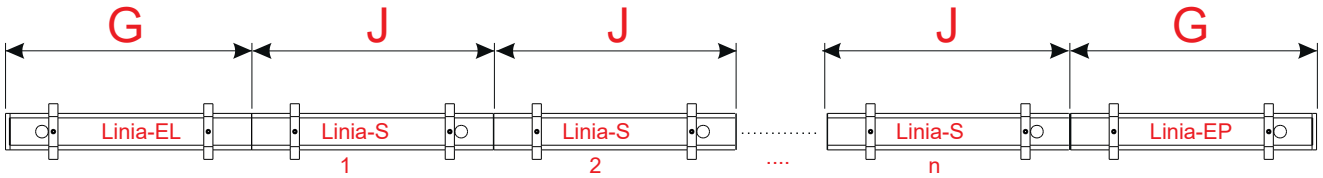

For lines ED,EDD:

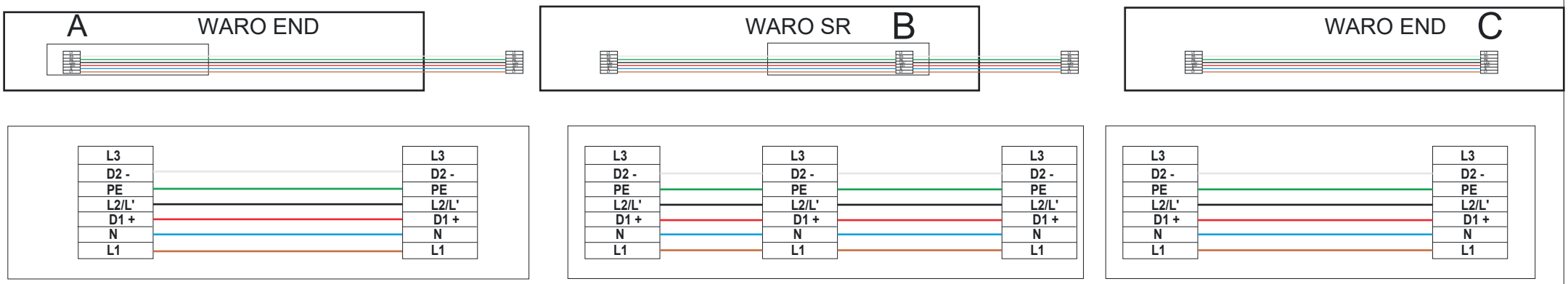
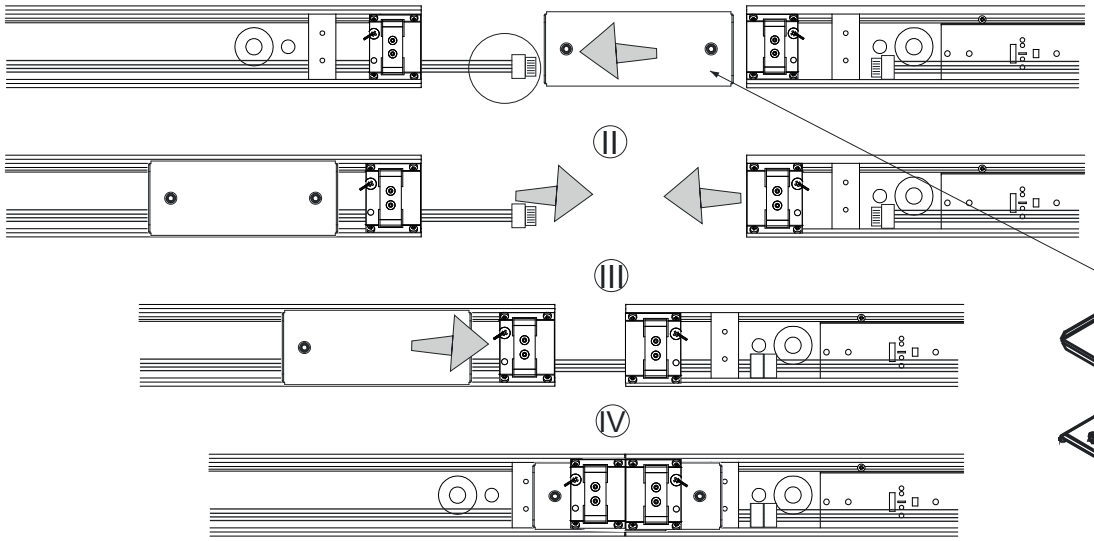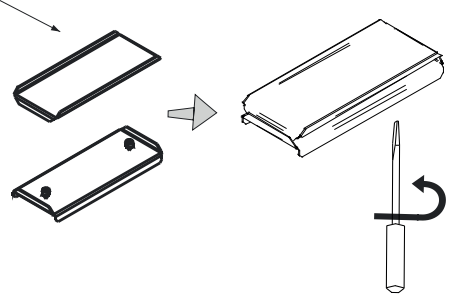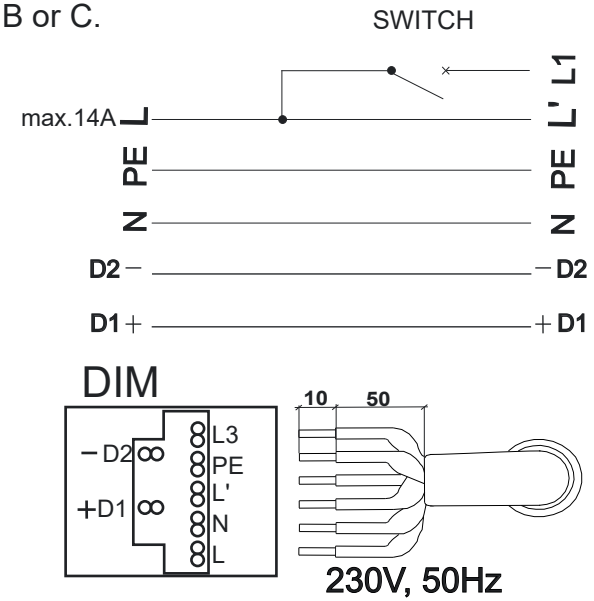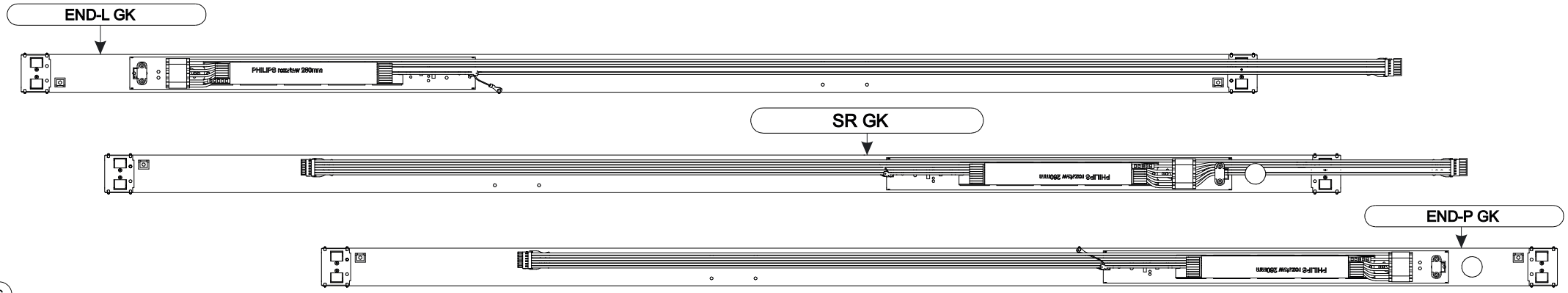
Connect supplying in A or B or C.